Insulation monitoring
S1EN

The insulation monitoring relay S1EN provides protection against insulation faults in galvanically isolated voltage supply networks (IT systems). It meets the requirements of DIN EN 61557-8.

Features

- For DC and AC supplies
- Normally energised mode
- Fault latching or automatic reset
- Normal/test operation
- External reset button can be connected

Approvals

	S1EN
c UL us LISTED	●
CCC	●

Technical Details	S1EN
Electrical data	
Supply voltage	AC/DC: 24 ... 240 V
Tolerance	85 ... 110 %
Power consumption	240 V AC 5 VA, 24 V DC: 1 W
Switching capability in accordance with EN 60947-4-1, 10/91	AC1: 240 V/0.1 ... 5 A/1200 VA DC1: 24 V/0.1 ... 5 A/120 W
EN 60947-5-1, 10/91	AC15: 230 V/2 A; DC13: 24 V/1.5 A
Output contacts	1 auxiliary contact (C/O)
Contact material	AgCdO, 3 µm gold plating for low-load range 1-50 V/1-100 mA
Contact fuse protection in accordance with EN 60947-5-1, 10/91	Max. 6 A quick or max. 4 A slow
Measuring circuit	
Rated mains voltage (monitored mains)	50 kΩ version: AC/DC: 0 ... 240 V 200 kΩ version: AC/DC: 0 ... 400 V
Response value	50 kΩ version: 12.5 ... 50 kΩ, adjustable 200 kΩ version: 50 ... 200 kΩ, adjustable
Release value	50 kΩ version: Response value + ca. 5 kΩ 200 kΩ version: Response value + ca. 20 kΩ
Max. measuring current (DC)	50 kΩ version: 2.4 mA 200 kΩ version: 1.0 mA
Max. measuring voltage (DC)	± 17 V
Max. permitted external voltage (AC/DC)	50 kΩ version: 264 V 200 kΩ version: 460 V
Min. impedance (AC/DC)	50 kΩ version: 75 kΩ 200 kΩ version: 300 kΩ
Max. permitted line capacitance	1 µF
Max. response error in accordance with DIN EN 61557-8 (05/98)	± 15%
Reaction time	10 s
Environmental data	
Climatic suitability	IEC 60721-3-3, 1995
Condensation and icing	Not permitted
Mechanical data	
Max. cable cross section of ext. conductor	1 x 4 mm² or 2 x 1.5 mm²
Dimensions (H x W x D)	87 x 22.5 x 122 mm
Weight	150 g

Description

The earth fault monitoring relay is enclosed in an S-95 slimline housing. There are two versions available with measuring ranges of 50 kΩ and 200 kΩ. The universal power supply can be used with all supply voltages.

Features:
- Relay outputs: 1 auxiliary contact (C/O)
- Two insulation measuring circuits
- Detects symmetrical insulation faults
- Switch for function testing
- LED display for supply voltage and faults

(See next page for function description)

Pilz GmbH & Co. KG, Sichere Automation, Felix-Wankel-Straße 2, 73760 Ostfildern, Germany
Telephone: +49 711 3409-0, Telefax: +49 711 3409-133, E-Mail: pilz.gmbh@pilz.de

Insulation monitoring
S1EN

The device measures the insulation resistance between the phases and system earth in galvanically isolated voltage supplies. If the insulation resistance in one of the two measuring circuits falls below the response value R_{on}, the auxiliary contact switches over and the fault LED lights up. If resistance then exceeds the release value R_{off} the device is immediately ready for operation if automatic reset is selected. If manual reset is selected an external button or the MR/AR switch must be operated

Internal wiring diagram

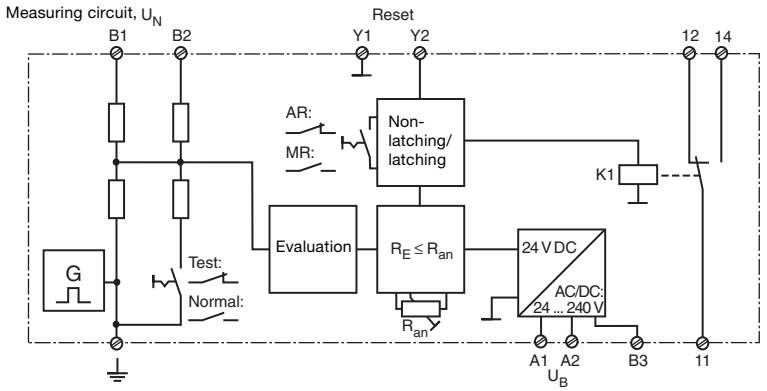

U_N Mains voltage
R_{on} Response value

U_B to B3-A2: 24 V AC/DC
U_B to A1-A2: 42-240 V AC/DC

Timing diagram

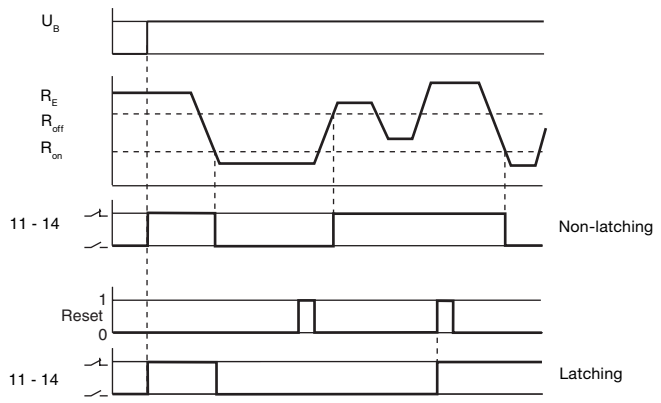

U_B Supply voltage
R_{on} Response value

R_{off} Release value
R_E Insulation resistance

Insulation monitoring
S1EN

Connection examples

● Example 1
AC application circuit

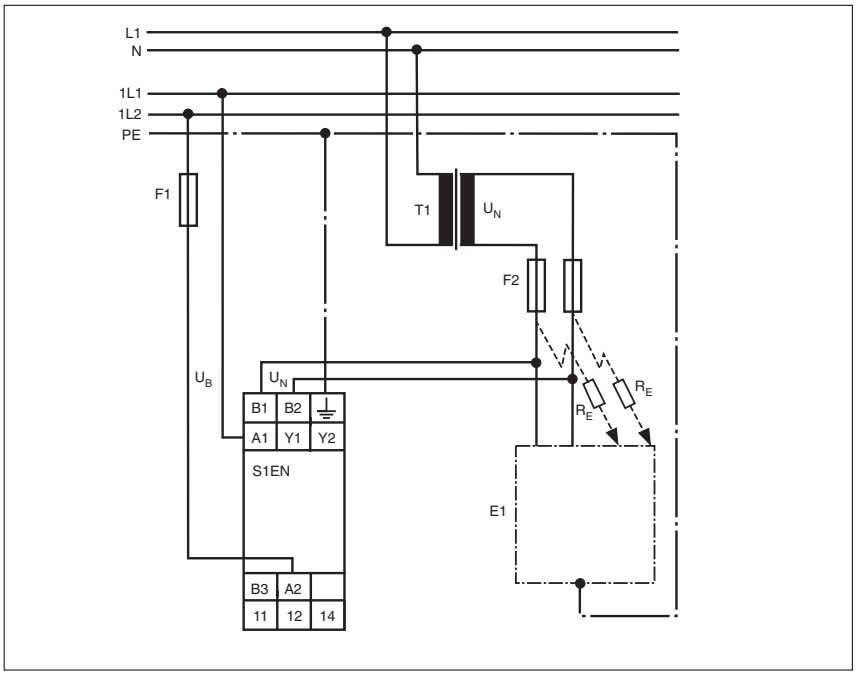

● Example 2
3AC application circuit

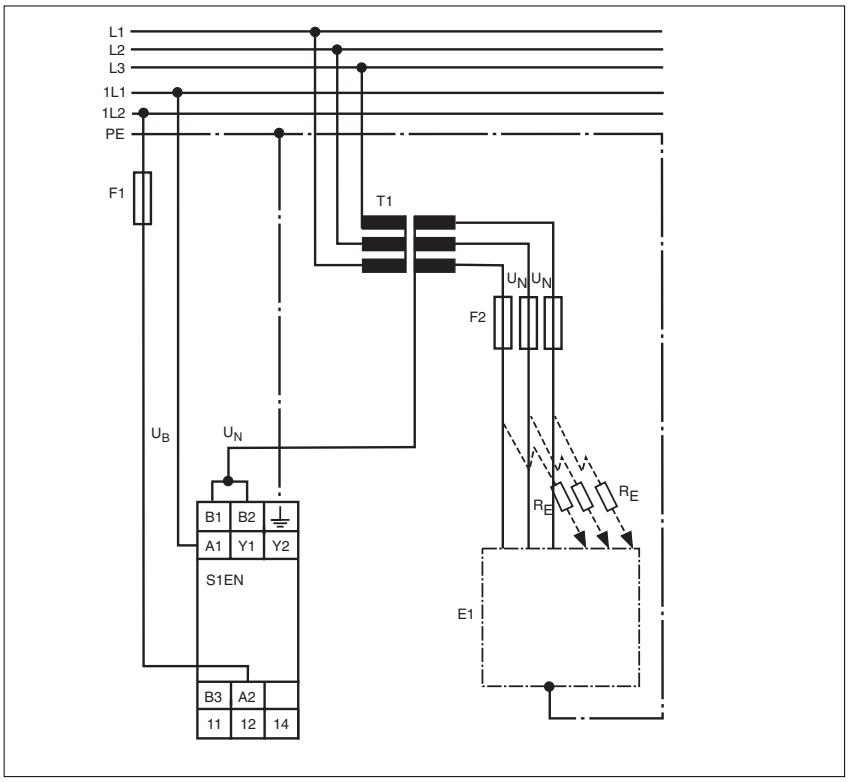

Insulation monitoring
S1EN

● Example 3
3AC/DC application circuit

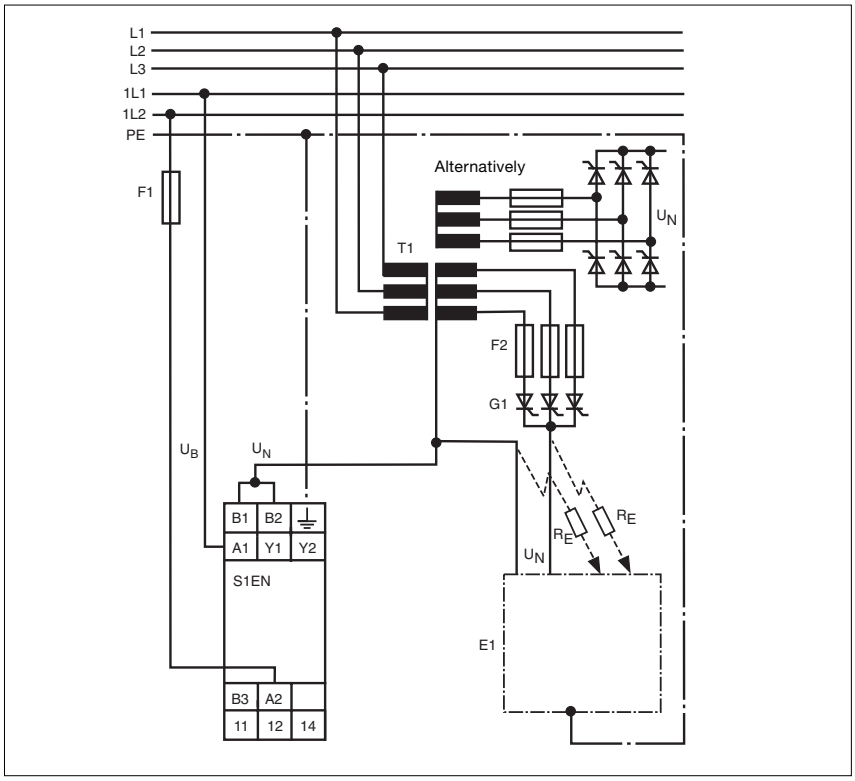

● Example 4
DC application circuit

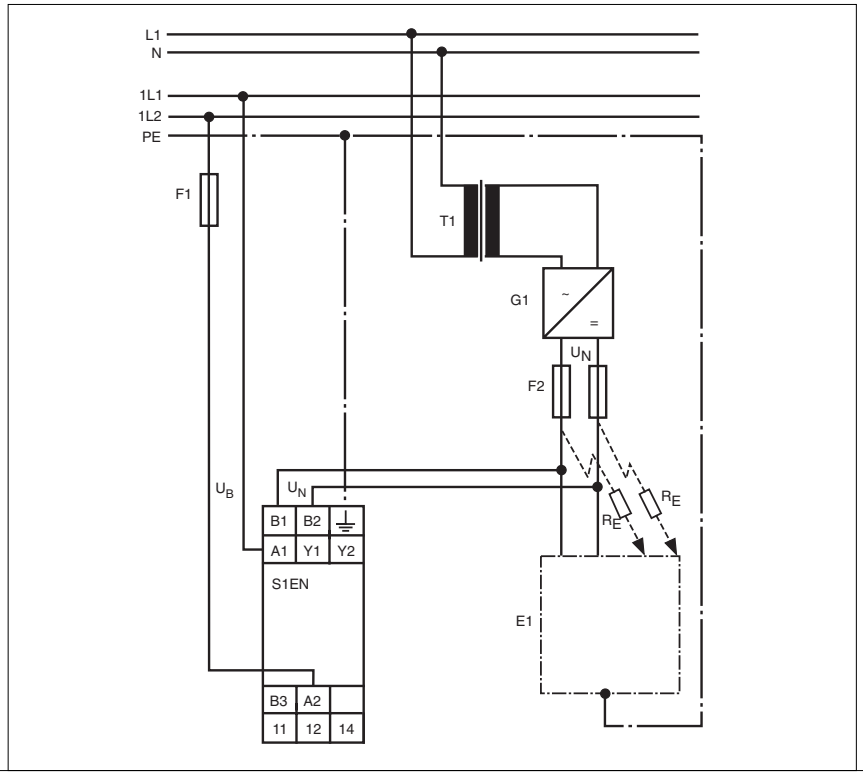

Insulation monitoring
S1EN

General Details

Unless stated otherwise in the technical details for the specific unit.

Electrical data	
AC frequency range	50 ... 60 Hz
DC residual ripple	160 %
Contact material	AgCdO
Continuous duty	100 %
Environmental data	
EMC	EN 50081-2, 01/92; EN 50082-2, 03/95
Vibration in accordance with EN 60068-2-6, 04/95	Frequency: 10 ... 55 Hz Amplitude: 0.35 mm
Climatic suitability	IEC 60068-2-3, 1969
Airgap creepage	DIN VDE 0110-1, 04/97
Ambient temperature	-10 ... +55 °C
Storage temperature	-40 ... +85 °C
Mechanical data	
Torque setting for connection terminals	0.6 Nm (screws)
Mounting position	Any
Housing material	Thermoplast Noryl SE 100
Protection types	Mounting: IP54 Housing: IP40 Terminals: IP20

Order reference

Type	U_B	R_{on}	Order no.
S1EN	24-240 VAC/DC	50 KΩ	884 100
S1EN	24-240 VAC/DC	200 KΩ	884 110

Order references key

U_B Supply voltage
R_{on} Response value

Pilz GmbH & Co. KG, Sichere Automation, Felix-Wankel-Straße 2, 73760 Ostfildern, Germany
Telephone: +49 711 3409-0, Telefax: +49 711 3409-133, E-Mail: pilz.gmbh@pilz.de